Design Criteria:
276 houses @ 446L per house = 123100 litres per day (24hr Holding)
Cover level at sump: 17
Invert Level at Sump: 14.98
Invert into sump: 2.02m
Invert level at POD: 15.08
Invert at base of sump: 11
Head difference: 4.08m plus friction losses etc.

Equipment:

1 x Carlow Precast 5.6m x 2.4m Pump Chamber with 1400 x 850 ope
1 x 1.5m x 1.5m x 1.5m Precast Valve Chamber with 1400 x 850 ope
2 x 1400mm x 800mm Manhole covers with spring assist and safety frame
1 x Conder GRP Overflow Tank 100m3 - 14.67m x 3m
2 x Homa GRP26 D Pumps
2 x Homa Pedestals
2 x 6m Certified Pump Chain with 1m rings
1 x Control Panel with GSM Dialler
1 x Ultrasonic Level Control System
4 x 6m Stainless Steel Guide Rails
2 x Internal Pipe Work from pedestals to Valve Chamber
2 x 80mm Valves
2 x 80mm Non-Return Valves
1 x 80mm Bauer Connector
1 x Flow meter with 80mm Reader
1 x GRP Kiosk with heat and light 2m x 1m x 1.9m
1 x Telemetry System - Irish Water Spec
1 x Delivery & Commissioning

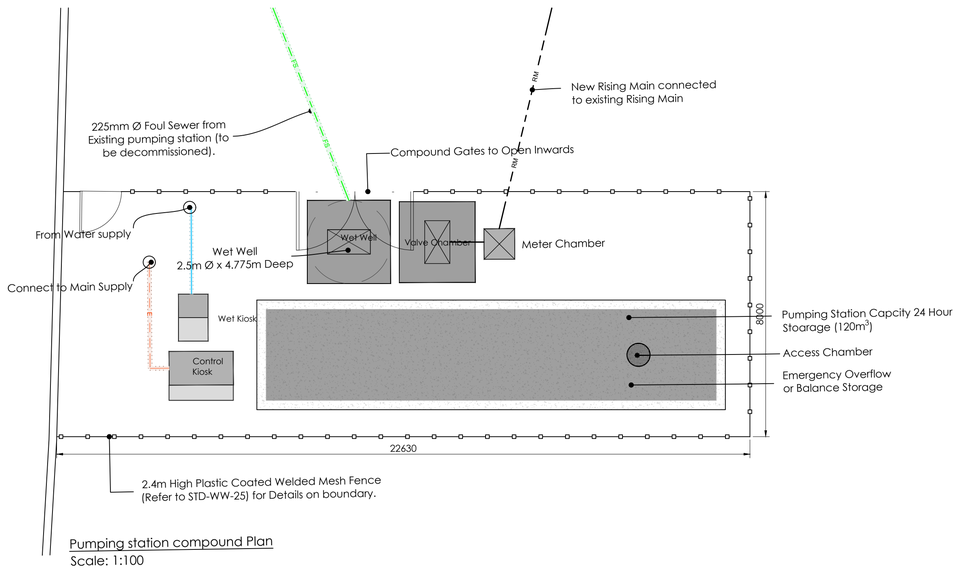

Pumping station compound Plan
Scale: 1:100

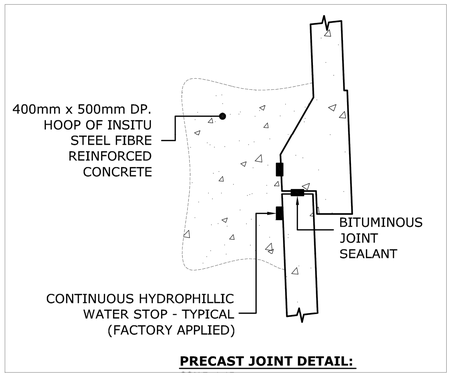

PRECAST JOINT DETAIL:

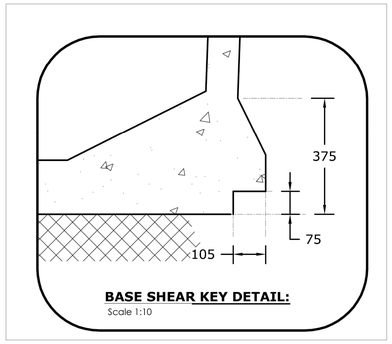

BASE SHEAR KEY DETAIL:
Scale 1:10

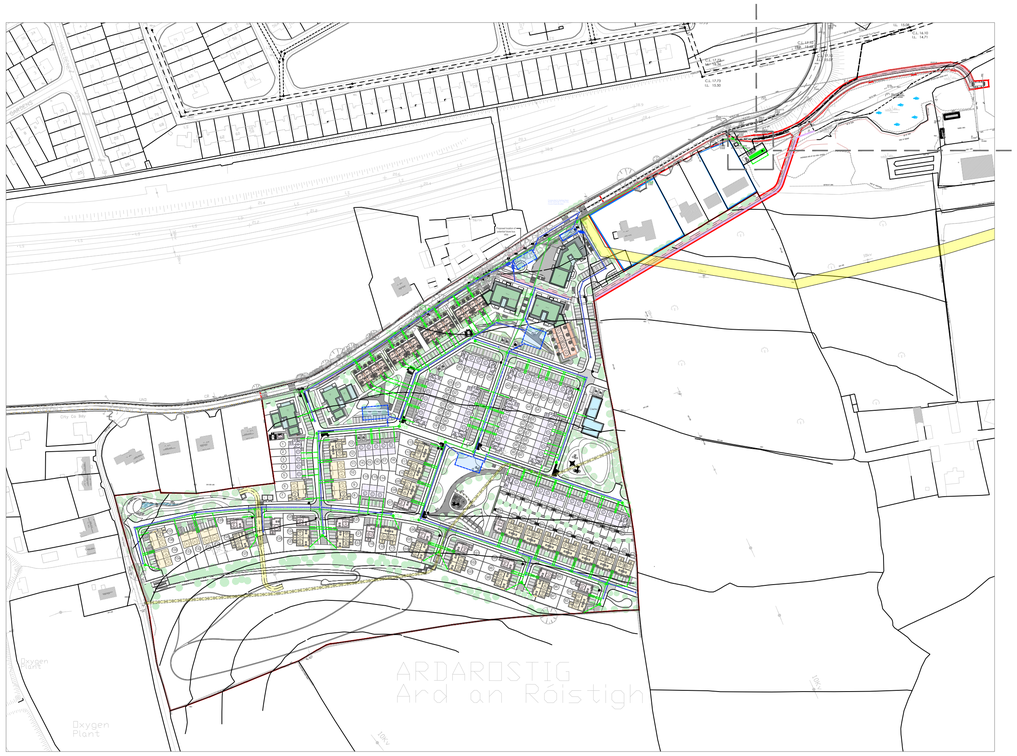

Key Plan
Scale 1:2500

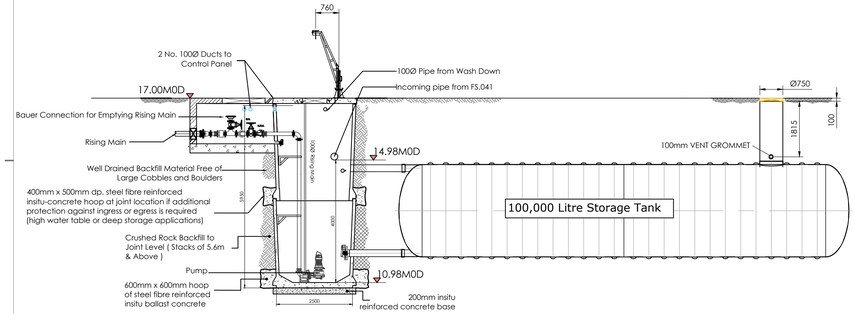

Pump Chamber - Section A
Scale: 1:50

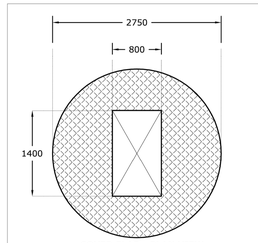

COVER SLAB - PLAN VIEW:
SCALE: 1:50

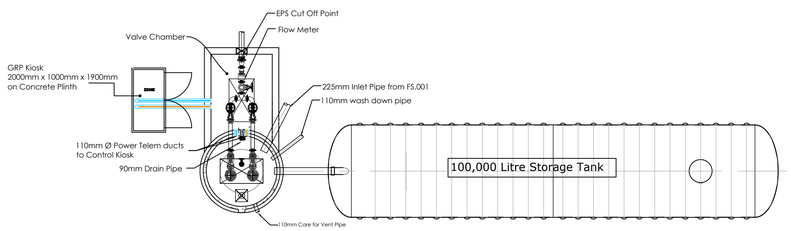

Base Unit Plan View
Scale: 1:100

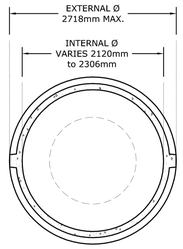

BASE UNIT - PLAN VIEW:
SCALE: 1:50

DOSA
DENIS O'SULLIVAN & ASSOCIATES
CONSULTING ENGINEERS

Joyce House
Barrack Square
Ballincollig
Co Cork
P31 KP84

021 4871781
info@dosa.ie
www.dosa.ie

© THIS DRAWING IS COPYRIGHT, NO PART OF THIS DOCUMENT MAY BE RE-PRODUCED OR TRANSMITTED IN ANY FORM OR STORED IN ANY RETRIEVAL SYSTEM OF ANY NATURE WITHOUT THE WRITTEN PERMISSION OF THE ENGINEER AS COPYRIGHT HOLDER EXCEPT AS AGREED FOR USE ON THE PROJECT FOR WHICH THE DOCUMENT WAS ORIGINALLY ISSUED.

REV.	DRAWN	CHKD	APPRVD	DATE	DETAILS
D	S.B.	S.O'G.	L.O'T.	23.04.21	SHD Application

CLIENT: Ardstone Homes.

PROJECT: Residential Development @ Ardarostig, Bishopstown, Cork

DRAWING TITLE: Pumping Station Plans & Section

SHEET: A1

SCALE: 1:100; 1:10; 1:50

PROJECT NO. 5181 _ DRAWING NO. 0424 _ STATUS/ISSUE D